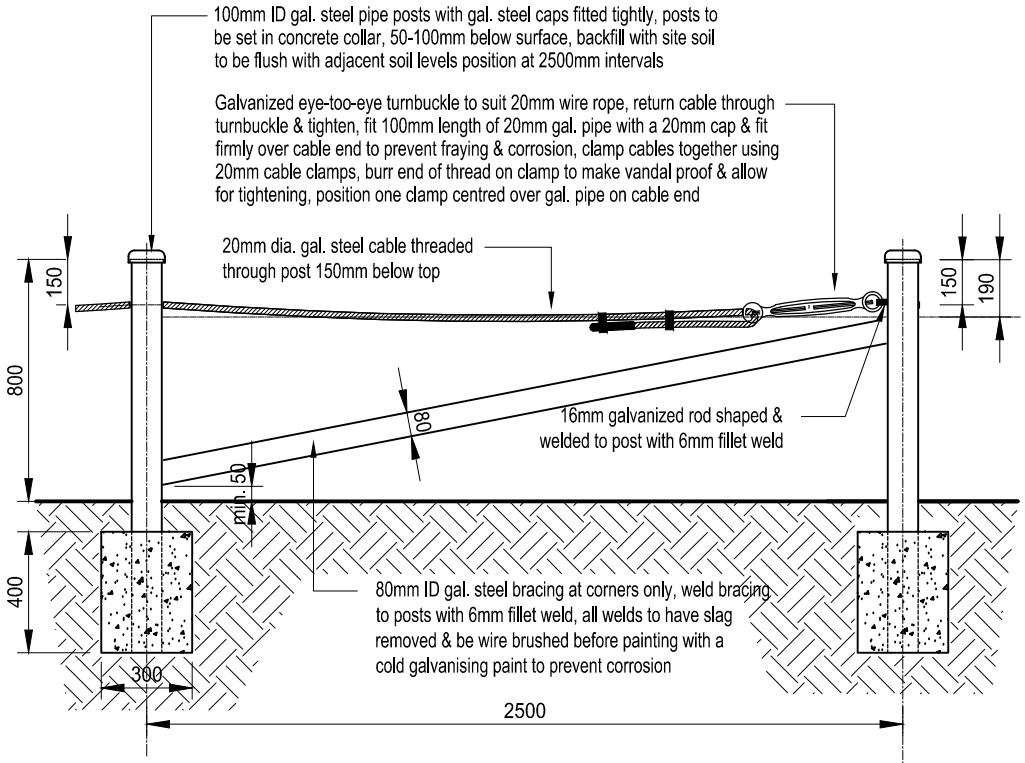

D1 SECTION

SECTION 1:25

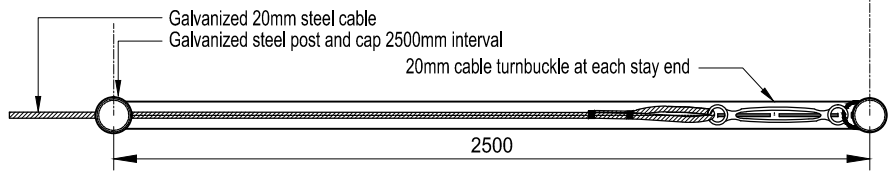

D2 PLAN

PLAN VIEW 1:25

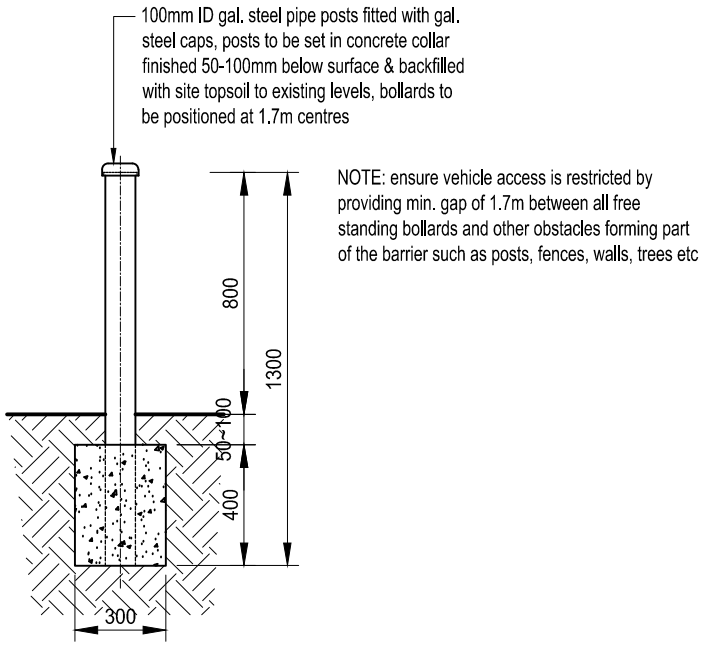

D3 STEEL BOLLARD

SECTION 1:25

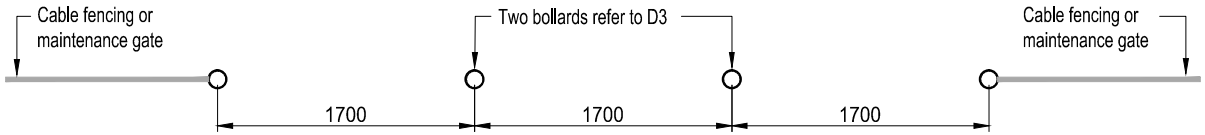

D4 TYPICAL PLAN FOR PEDESTRIAN ENTRY

PLAN VIEW 1 : 50

VERSION	DATE	COMMENTS	PAPER SIZE
04	05/2013	For DCP	A4
03	13/08/2009	For inclusion in DCP amendments.	A3
02	01/2002	Enhanced by RAP.	A3
01	04/1998	Designed by MN.	A3

WORK TO FIGURED DIMENSIONS - DO NOT SCALE. DO NOT RELY ON THESE STANDARD DRAWINGS AS THE EQUIVALENT OF, OR SUBSTITUTE FOR, PROJECT-SPECIFIC DESIGN & ASSESSMENT BY A QUALIFIED PROFESSIONAL.

Lake Macquarie City Council

126-138 MAIN ROAD
SPEERS POINT
PHONE (02)4921 0333
www.lakemac.com.au

SHEET: 1 OF 1

DRAWING TITLE: Post and Cable Fencing

DRAWING No: EDSD-601

VERSION: 4